Portly Piper Ajax

Video Distribution

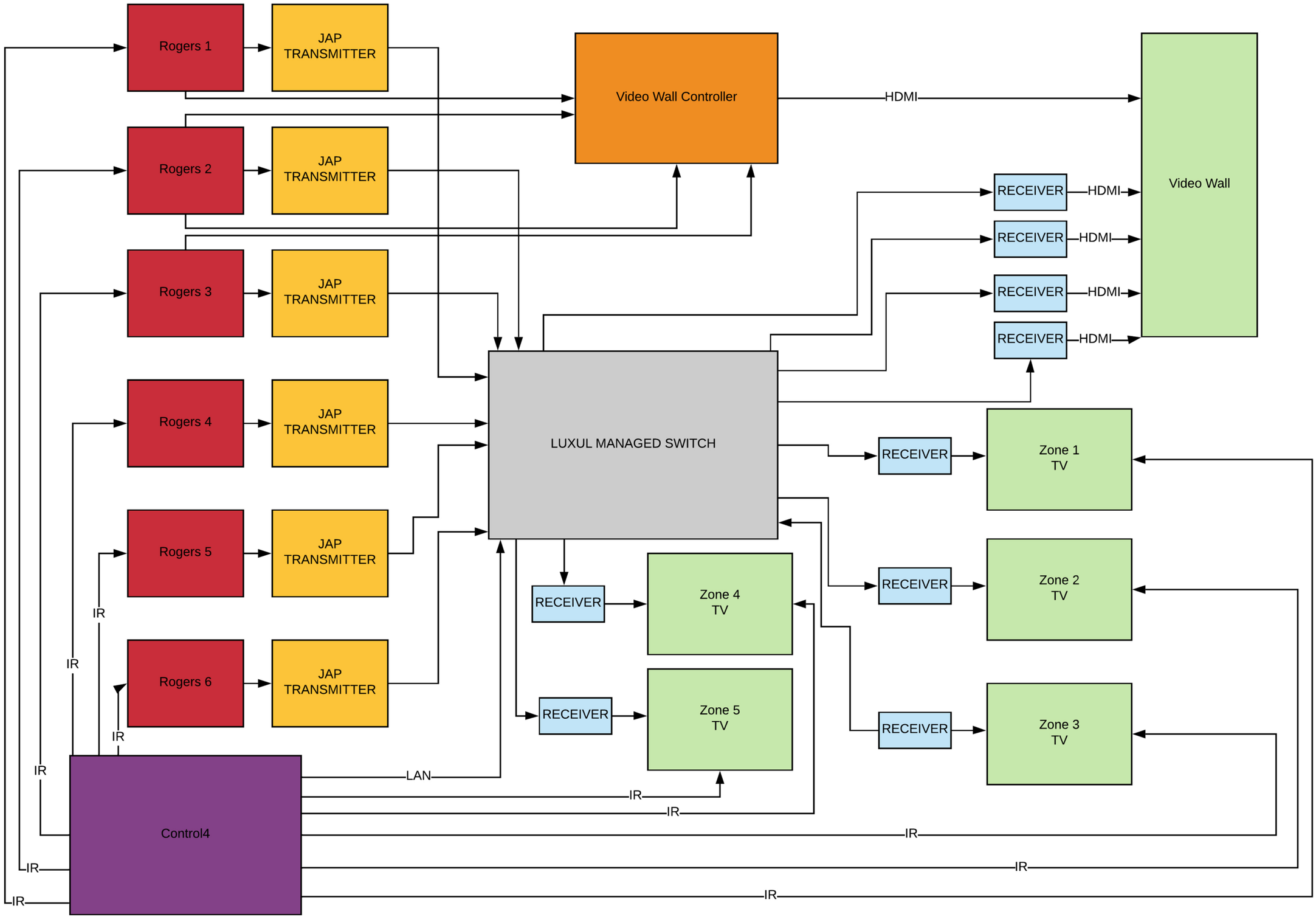

AUDIO | VIDEO | SURROUND SOUND | MEDIA DISTRIBUTION | AUTOMATION | SURVEILLANCE | SECURITY | NETWORK

INFINITECORP.CA